15° SKEW 32'-0" - 33'-6" BRIDGE WIDTH 2:1 FILL SLOPES

Bill of Reinforcement

MARK	A1				A2				A3			A4			A5			A6										A7				A8				A9				A10			A11			A12			A13			A14			A15			A16			A17			A18		
TYPE	Str.				Str.				Str.			Str.			Str.			4										Str.				Str.				Str.				8			8			8			8			7			7			Str.			Str.			Str.		
SIZE									#5			#5			#5																					#5				#5			#5			#5			#5			#5			#5			#5			#5			#5		
H	No.	Size	Length Ft.	Length In.	No.	Size	Length Ft.	Length In.	No.	Size	Length Ft.	No.	Size	Length Ft.	No.	Size	Length Ft.	No.	Size	Length Ft.	Spacing	A Ft.	A In.	B Ft.	B In.	C Ft.	C In.	D Ft.	D In.	No.	Size	Length Ft.	Length In.	No.	Size	Length Ft.	Length In.	No.	Size	Length Ft.	Length In.	No.	Size	Length Ft.	Length In.	No.	Size	Length Ft.	Length In.	No.	Size	Length Ft.	Length In.	No.	Size	Length Ft.	Length In.	No.	Size	Length Ft.	Length In.	No.	Size	Length Ft.	Length In.	No.	Size	Length Ft.	Length In.
15-16	86	10	11	8	12	86	7	11	8	12	24	21	5	24	26	7	24	47	1	83	9	9	11	12	8	⅞	1	10	0	11⅞	8	6	87	5	4	11	12	83	6	12	10	12	87	12	10	12	14	27	4	14	25	6	14	20	10	14	19	9	14	47	5	14	44	5	2	29	8	2	23	3	110	5	9
13-14	82	9	10	8	12	82	7	10	8	12	22	19	2	22	23	5	22	46	8	78	8	8	3	12	6	11	1	3	0	8	7	3	82	5	4	11	12	78	6	10	10	12	82	10	10	12	12	24	4	12	22	6	12	18	10	12	17	9	12	47	5	12	44	5	2	26	8	2	21	3	100	5	9
11-12	78	8	9	8	12	78	6	9	8	12	20	16	11	20	20	3	20	46	3	73	7	7	1	12	5	10¼	1	2	0	7	6	2	77	5	4	11	12	73	5	8	10	12	77	8	10	10	12	21	4	10	19	6	10	16	10	10	15	9	10	47	6	10	44	5	2	23	8	2	19	3	90	5	9
9-10	73	7	8	8	12	73	5	8	8	12	18	13	8	18	17	1	18	45	10	67	6	6	1	12	5	1	1	0	0	6	5	4	71	5	4	11	12	67	5	6	10	12	71	6	10	12	8	18	4	8	16	6	8	13	10	8	12	9	8	47	6	8	44	5	2	20	8	2	16	3	78	5	9
7-8	68	6	7	2	12	68	5	7	2	12	16	11	2	16	12	6	16	44	10	61	5	5	7	12	4	8½	0	10	0	5	4	11	65	5	4	11	12	61	5	4	10	12	65	4	10	12	6	14	4	6	12	6	6	11	10	6	10	9	6	47	6	6	44	5	2	16	8	2	14	3	66	5	9
5-6	65	5	6	2	12	65	5	6	2	12	14	8	11	14	10	4	14	44	5	57	5	5	7	12	4	8½	0	10	0	5	4	11	61	5	4	11	12	57	5	2	10	12	61	2	10	12	4	12	4	4	10	6	4	9	10	4	8	9	4	47	6	4	44	5	2	14	8	2	12	3	58	5	9

Reinforcement Details

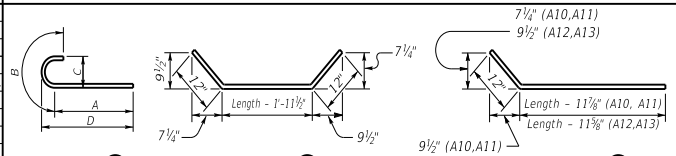

Table of Dimensions

H	W Length Ft.	W Length In.	N Length Ft.	N Length In.	M6 Length Ft.	M6 Length In.	M7 Length Ft.	M7 Length In.	S6 Length Ft.	S6 Length In.	S7 Length Ft.	S7 Length In.	T6 Length Ft.	T6 Length In.	T7 Length Ft.	T7 Length In.	L6 Length Ft.	L6 Length In.	L7 Length Ft.
15-16	12	0	5	0	16	⅜	17	⅞	24	8⅞	22	⅜	20	11⅛	13	¾	24	18	
13-14	11	0	4	6	14	1½	15	2⅞	24	5½	21	11½	18	4⅞	11	8¼	21	16	
11-12	10	0	4	0	12	2⅜	13	5½	24	1⅜	21	10⅝	15	10⅞	10	3⅞	18	14	
9-10	9	0	3	6	10	3½	10	10½	23	10	21	8¾	13	4⅝	8	4⅛	15	11	
7-8	7	6	2	9	7	8⅛	9	0	23	4½	21	6⅜	10	⅛	6	10⅞	11	9	
5-6	6	6	2	3	6	4½	7	2⅝	23	⅞	21	5⅜	8	3⅜	5	6½	9	7	

4 foot min. shoulder

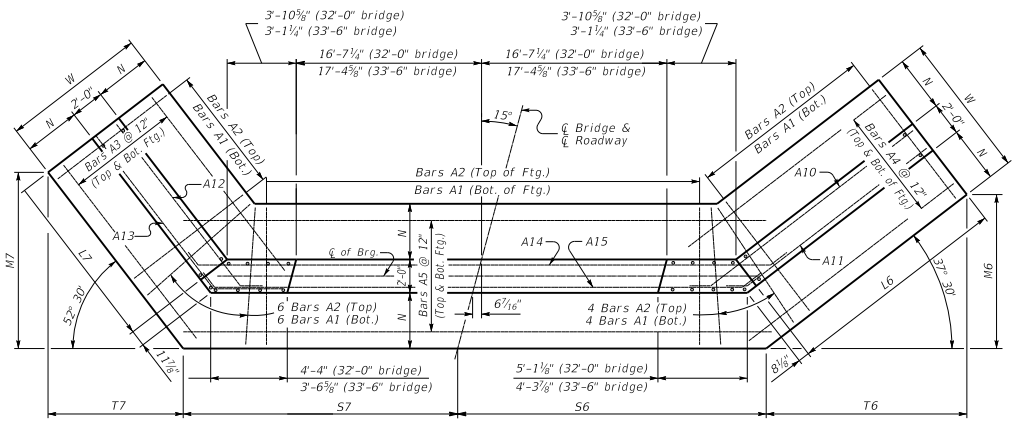

(Left Skew as shown;right skew opp. hand)

PLAN

NOTE: Trim A16 & A17 bars if necessary

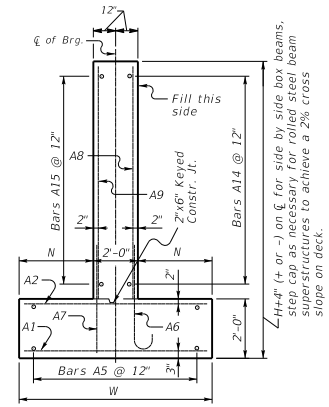

WALL SECTION

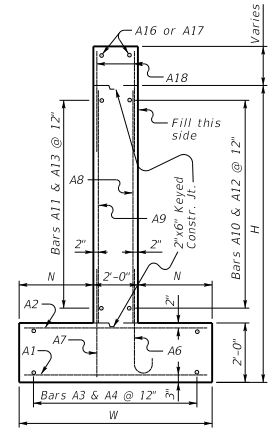

WING SECTION

Quantities		
H	Concrete* C.Y.	Reinforcement LBS.
5	44.9	3731
6	49.2	3731
7	62	5067
8	66.6	5067
9	86	7196
10	91.1	7196
11	110.3	10103
12	115.8	10103
13	135.5	14061
14	141.4	14061
15	163	18138
16	169.3	18138

*Concrete quantities computed using 21" beam depth on ½" pad & 32'-0" Bridge Width

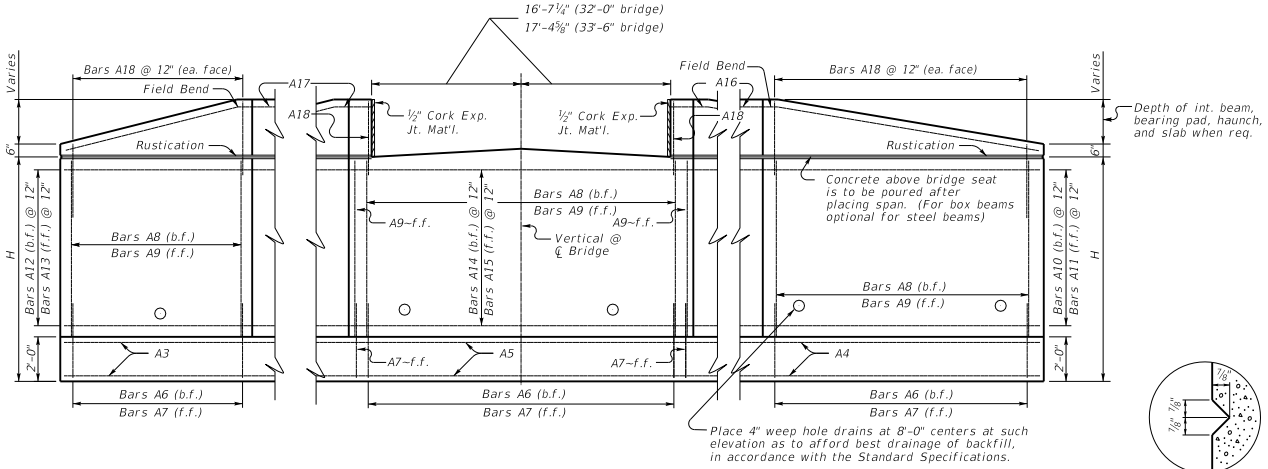

ELEVATION

RUSTICATION GROOVE

GENERAL NOTES

SPECIFICATIONS: *Construct abutments according to the current edition of the Kentucky Department of Highways Standard Specifications for Road and Bridge Construction. Abutments are designed for side by side box beams as detailed in Standard Drawings BDP-001 through BDP-012, current edition. Dimensions may be adjusted to allow for 33'-6" rolled steel beam bridge width.*

FOUNDATION PRESSURE: *Construct abutment footings on solid rock bearing material that can support a pressure of 8000 psf service or 10,800 psf strength factored as recommended by a geotechnical engineer.*

WING LENGTHS: *Calculated assuming 21" superstructure depth and stream bank elevation at top of footing.*

FOOTING ELEVATION: *Construct bottom of footing below the anticipated scour elevation. (This typically entails embedding the footings 1'-0" to 2'-0" into rock and pouring concrete directly against cut rock faces as recommended by geotechnical engineer.)*

NOTE: *Distances to bars shown are clear dimensions unless otherwise noted.*

MATERIAL SPECIFICATIONS:
Concrete, Class "A" = 3500 psi
Steel Reinforcement = Grade 60

KENTUCKY
DEPARTMENT OF HIGHWAYS

15° SKEW
32'-0"-33'-6" NRIDGE WIDTH
2:1 FILL SLP. 4' MIN. SHLDR.

STANDARD DRAWING NO. BSA-106

SUBMITTED _____ DIRECTOR DIVISION OF STRUCTURAL DESIGN — DATE 02-26-20

APPROVED _____ STATE HIGHWAY ENGINEER — DATE 02-26-20